IMPLEMENTATION OF DIGITAL SIGNAL PROCESSING (IDSP)

Fixed-Point Design

THE INTERPRETATION OF BIT VECTORS

- Which number is this?

1	1	0	1

FIXED-POINT DESIGN

- Central issue: how to perform a desired computation with as few bits per operand as possible
- Some material based on:
  - Bouganis, C.S. and G.A. Constantinides, "Synthesis of DSP Algorithms from Infinite Precision Specifications", In: P. Coussy and A. Morawiec (Eds.), High-Level Synthesis, From Algorithm to Digital Circuit, Springer, pp. 197-214, (2008).
  - NN, *SystemC Version 2.0 User's Guide, Update for SystemC 2.0.1*, (2002).
- Thanks to Jeroen de Zoeten, for some material reused from his M.Sc. graduation presentation (2004).

TOPICS

- Fixed-point data types
- SystemC
- Peak-value estimation
- Word-length optimization

FIXED-POINT DATA TYPES

- A specific interpretation of a logic vector
  - Binary point
  - Integer and fractional part: **`iwl`** and **`fwl`** (integer and fractional word length)
  - Signed or unsigned

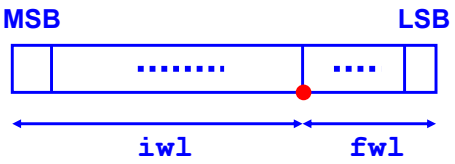

EXAMPLES OF FIXED-POINT NUMBERS

- Example pattern: **`1101`**
  - With **`iwl`** = 2 and unsigned → 13/4
  - With **`iwl`** = 2 and signed → -3/4

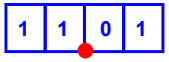

  - With **`iwl`** = 6 and unsigned → 52
  - With **`iwl`** = 6 and signed → -12

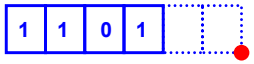

  - With **`iwl`** = -1 and unsigned → 13/32
  - With **`iwl`** = -1 and signed → -3/32

FIXED-POINT ADDITION/SUBTRACTION

- Integer adder can be used after:
  - Alignment of binary point
  - Sign extension

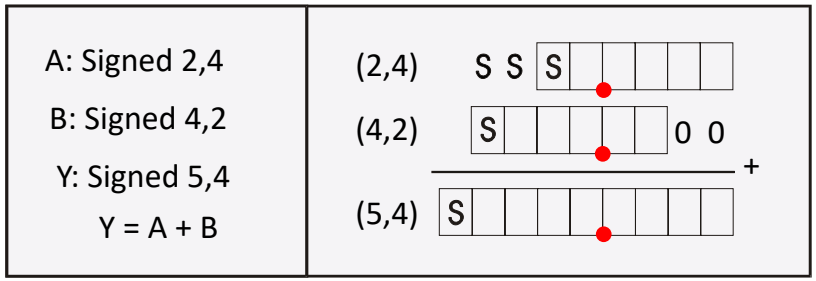

FIXED-POINT MULTIPLICATION

- Integer multiplier can directly be used.
- One only needs to figure out the location of the binary point.

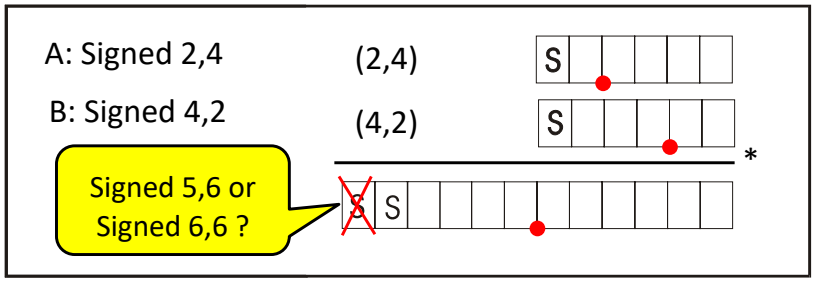

QUANTIZATION: TRUNCATION

- If the target provides less accuracy than the value to assign:
  - *Truncation* → no hardware
  - What happens to the signal in EE terms?

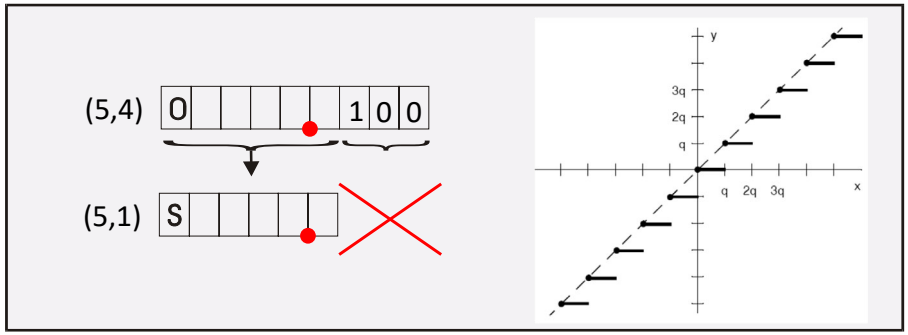

QUANTIZATION: ROUNDING

- If the target provides less accuracy than the value to assign:
  - *Rounding* (various modes) → extra hardware

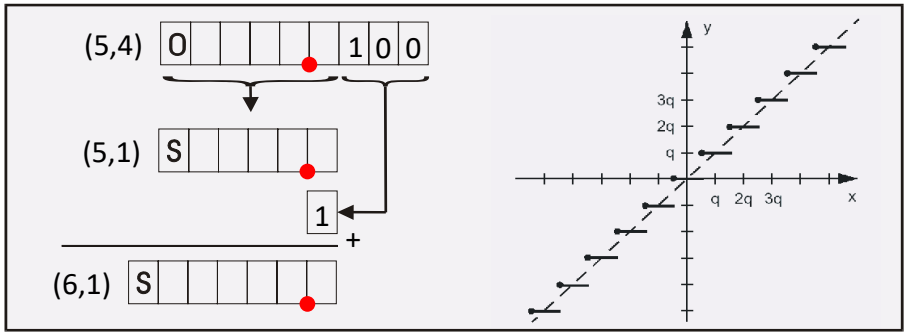

OVERFLOW: WRAP AROUND

- If the value to assign is outside the range of target:
  - *Wrap around* → no hardware

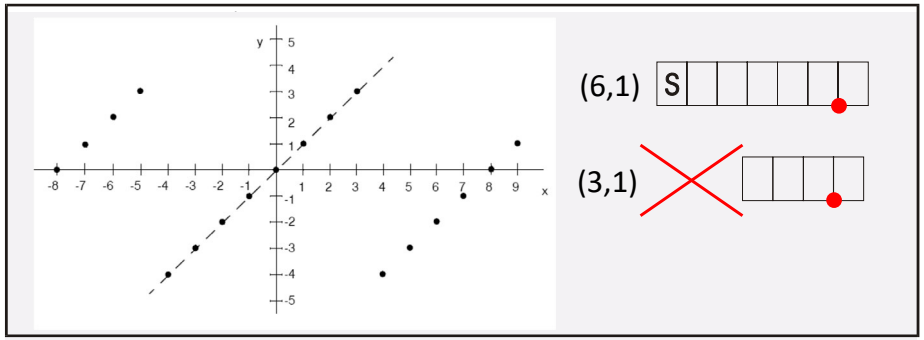

OVERFLOW: SATURATION

- If the value to assign is outside the range of target:
  - *Saturation* (various modes) → extra hardware

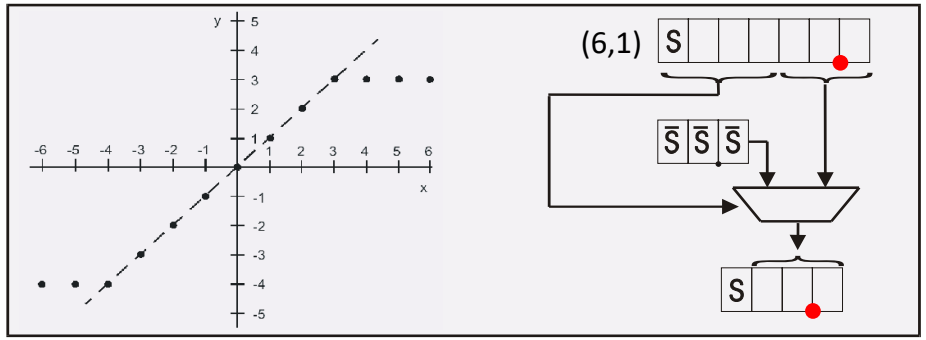

SystemC

- Open source standard for system-level modeling, based on C++ class libraries and a simulation kernel.
- Provides modeling from system level down to (mainly) register-transfer level (RTL).
- For more details, see the *Accellera* web site (non-profit organization for system-level design):

http://www.accellera.org/

SystemC FIXED-POINT DATA TYPES

- Declaration (signed and unsigned version):

```
sc_fixed<wl, iwl, q_mode, o_mode, n_bits> x;
sc_ufixed<wl, iwl, q_mode, o_mode, n_bits> x;
```

- **wl**: word length, **iwl + fwl**
- **iwl**: integer word length
- **q_mode**: (optional) quantization mode, default is truncation
- **o_mode**: (optional) overflow mode , default is wrap around
- **n_bits**: (optional) number of bits for overflow (**n_bits** are saturated, the others are wrapped around)
- **sc_fix/sc_ufix** data types can be resized at run time

SystemC FIXED-POINT CODE EXAMPLE

```
sc_fixed<6, 2> a;
sc_fixed<6, 4> b;
sc_fixed<3, 2, SC_RND, SC_SAT> c;

c = a + b;
```

- Implementation:
  - Calculate sum at full precision
  - Perform quantization processing
  - Perform overflow processing

VHDL 2008 has also a fixed-point number package

ALGORITHMIC C

- Algorithmic C is a library for fixed-point arithmetic (and more) in C, developed by Siemens (former Mentor Graphics) and donated as open source:

https://github.com/hlslibs/ac_types/

- Faster than SystemC
- Supported by the Siemens HLS tool *Catapult* (available in the CAES Group)

MATLAB

- Matlab is an *untyped* language:
  - A variable can be assigned objects of any type.
- `a = fi(3.14, 1, 3, 2);`
  - `a` holds a signed (second argument = 1) fixed-point number with 3 integer and 2 fractional bits.
  - As opposed to SystemC, saturation and rounding are the default.
  - So, in the example a gets value 3.25.
- `a = 2.7;`
  - `a` gets assigned a double (floating-point number); previous fixed-point properties are lost.
- `a(:) = 2.7;`
  - `a` preserves previous fixed-point properties.

THE FIXED-POINT DESIGN PROBLEM (1)

- Mathematical descriptions of DSP algorithms often assume infinite precision in the signal representation.
- The closest approximation of infinite precision in computers is the *floating-point* number representation.
- Floating-point hardware is expensive and is avoided if possible.
- Implementations therefore use fixed-point hardware.

- Problem: *which fixed-point formats should be used to obtain the cheapest implementation of the original algorithm while respecting some performance measure?*

THE FIXED-POINT DESIGN PROBLEM (2)

- One should look at:
  - The dynamic range: avoid *overflow* and therefore know *peak values*.
  - The accuracy: *quantization* levels.

BOUGANIS FIXED-POINT FORMAT

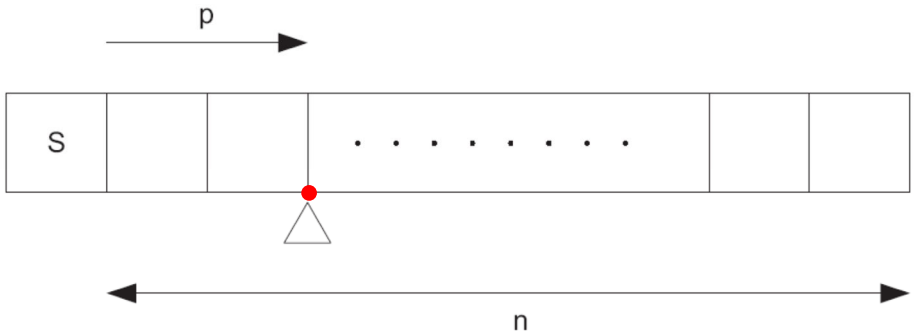

Considers signed numbers only; sign bit is not counted in size.

PEAK-VALUE ESTIMATION

- Related to the fact that signal magnitude may grow due to addition or multiplication
- In a stable system, the signal cannot grow indefinitely
- Question is: what is the maximal value encountered for each signal in the system?
- Issue is not directly related to accuracy, the number of bits used for each signal.

PEAK-VALUE ESTIMATION METHODS

- Analytic:
  - examine transfer functions
- Data-range propagation:
  - Interval analysis
  - Compute result interval from input intervals
  - Tends to overestimate requirements
- Simulation-driven analysis:
  - Monitor values produced during a representative simulation and record extremes
  - Use a safety factor > 1

ANALYTIC PEAK-VALUE ESTIMATION

- Consider an FIR filter:

$$y[n] = \sum_{k=0}^{N} h[k] \cdot x[n-k]$$

- Then, an upper bound for the output value is found by:

$$y_{\text{peak}} = x_{\text{peak}} \sum_{k=0}^{N} |h[k]|$$

- For recursive filters, a similar approach can be followed, starting from a state-space representation.

INTERVAL ANALYSIS (1)

- Represent each value x as an interval: $\tilde{x} = [x^-, x^+]$
- For each arithmetic operation, one can calculate the result interval from the operand intervals. For example:

$$\begin{aligned} \tilde{x} + \tilde{y} &= [x^- + y^-, x^+ + y^+] \\ \tilde{x}\tilde{y} &= [\min(x^-y^-, x^-y^+, x^+y^-, x^+y^+), \\ &\quad \max(x^-y^-, x^-y^+, x^+y^-, x^+y^+)] \end{aligned}$$

INTERVAL ANALYSIS (2)

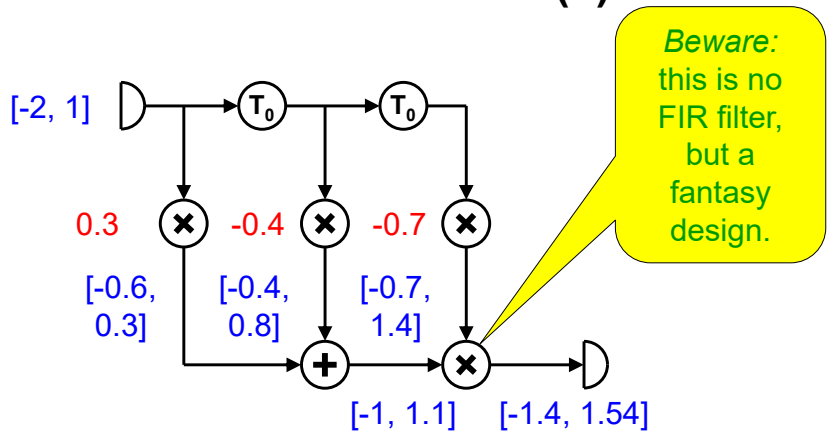

WORD-LENGTH PROPAGATION

Type	Propagation rules
GAIN	For input (n_a, p_a) and coefficient (n_b, p_b): $p_j = p_a + p_b$ $n_j^q = n_a + n_b$
ADD	For inputs (n_a, p_a) and (n_b, p_b): $p_j = \max(p_a, p_b) + 1$ $n_j^q = \max(n_a, n_b + p_a - p_b) - \min(0, p_a - p_b) + 1$ (for $n_a > p_a - p_b$ or $n_b > p_b - p_a$)
DELAY or FORK	For input (n_a, p_a): $p_j = p_a$ $n_j^q = n_a$

QUANTIZATION: NOISE MODELING (1)

- Suppose signal with fixed-point format (*n,* 0) is multiplied with another signal with fixed-point format (*n,* 0) and the result is truncated to *n* bits.
- Error ranges from 0 to $2^{-2n} - 2^{-n} \approx -2^{-n}$
- Uniform distribution of error: $p(e) = 2^n,\ e \in [-2^{-n}, 0]$
- Consider multiplication; is the error really uniformly distributed?

NOISE MODELING (2)

- Average error is: $-2^{-(n+1)}$
- Variance:

$$\sigma^2 = \int_{-2^{-n}}^{0} 2^n \left[e + 2^{-(n+1)}\right]^2 de = \frac{1}{12} 2^{-2n}$$

NOISE PROPAGATION

- In linear time-invariant (LTI) systems, one can analytically calculate the effect of quantization in input or intermediate nodes to noise on the output.
- In case of non-linear systems, one could linearize the system by means of Taylor expansion (a similar approach as a small-signal model used in electronics).
- Noise propagation methods have the advantage of reduced computational complexity with respect to a simulations-only approach.

FIXED-POINT OPTIMIZATION PROBLEM

- Define a *performance measure*. Examples:
  - SNR at the output of a filter
  - Bit-error rate in a communication system
- Define a *cost measure*, such as the *area* of the circuit.
- Goal is to satisfy a performance requirement at minimal cost by optimally choosing a fixed-point format for each signal in the system.
- The most practical approach is to start with a floating-point model and gradually replace the data types by fixed-point types while monitoring performance by simulations.

SCHEDULING, ETC.

- Sharing of resources across multiple clock cycles puts additional constraints on the fixed-point format of signals.